Acme Sanitary Ware Co. Ltd.
1/F, Acme Building, 22-28 Nanking Street, Kowloon, Hong Kong
Tel: 2388 7171 Fax: 2710 8012
Email: acme@acmesanitary.com.hk
Website: www.acmesanitary.com.hk
Since 1949

American Standard

PROJECT		REF		REV	ITEM CODE	
LOCATION		DATE			PAGE	

SANITARY WARE SPECIFICATION SHEET

Item Descriptions	American Standard (PRC) "Signature" Vitreous china above counter washbasin
Dimensions	L551 x W429 x H166 mm
Model	CP-0618.001.04
Material	Vitreous China
Manufacturer	American Standard (PRC)
Source	Acme Sanitary Ware Co. Ltd Mr. Eric Wong/ Mr. Don Yuen
Contact Tel/Fax E-mail Website	(852) 2388-7171 / (852) 2710-8012 acme@acmesanitary.com.hk www.acmesanitary.com.hk

Illustration/ Drawing

Detail specifications:
Signature - Vessel with Faucet Deck
With Overflow Hole
Water volume: 3.7L
Thin edge Modern Design

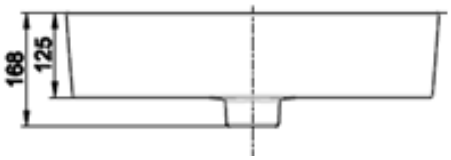

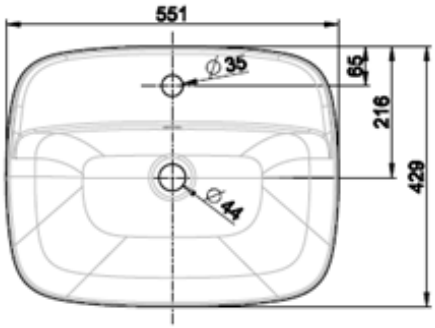

Note: Equivalent to CCAS0618-1010410C0

** All information of the above is for the reference only. No prior notice is made if any changes.*